EXHIBIT - HED DESCRIPTION CONVENTIONS

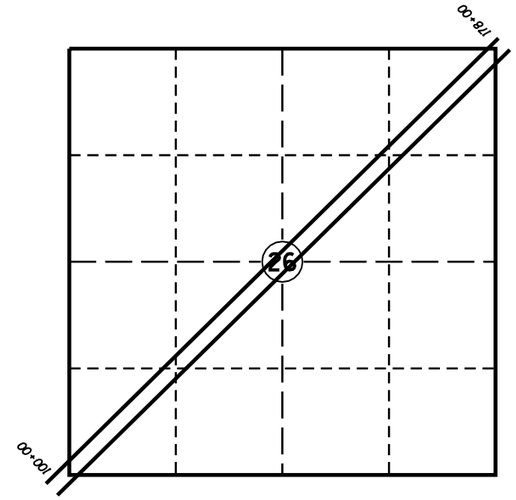

Pt. SW1/4, NW1/4SE1/4, SE1/4NW1/4, NE1/4 Sec 26

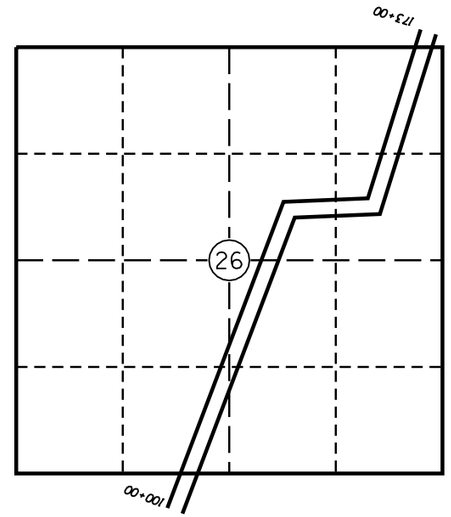

Pt. E2 SW1/4, W2 SE1/4, S2 NE1/4, NE1/4NE1/4 Sec 26

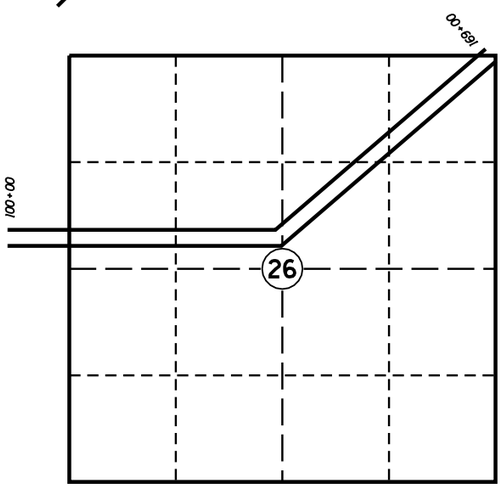

Pt. S2 NW1/4, W2 NE1/4, NE1/4NE1/4 Sec 26

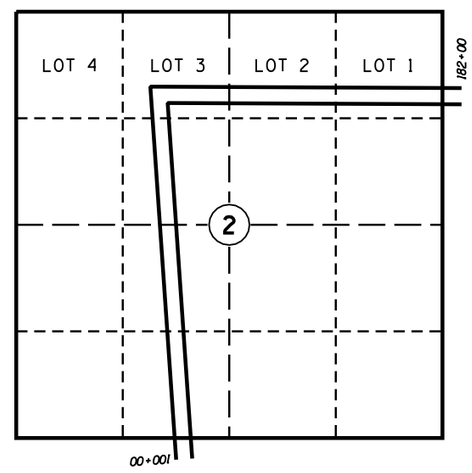

Pt. E2 SW1/4, SE1/4NW1/4, Lots 3, 2, & 1 Sec 2

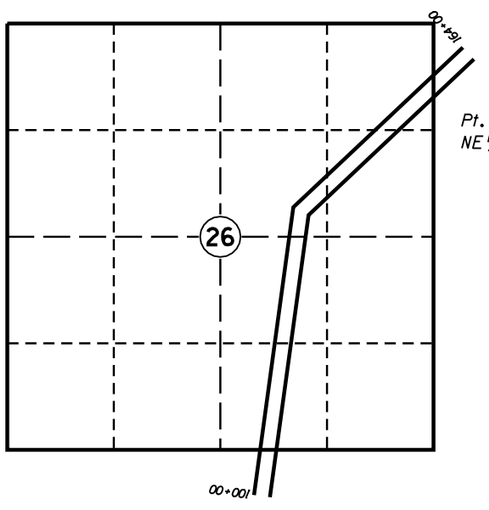

Pt. W2 SE1/4, S2 NE1/4, NE1/4NE1/4 Sec 26

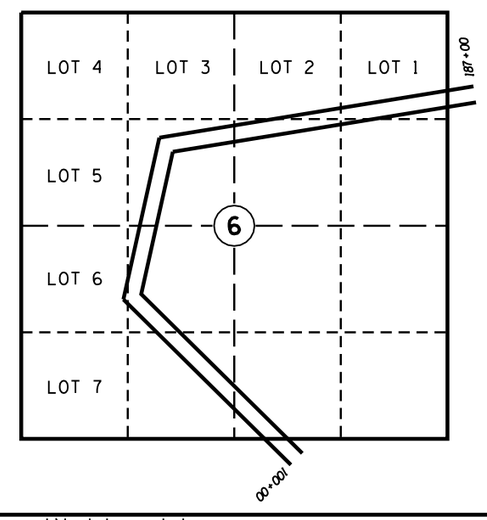

Pt. SW1/4SE1/4, E2 SW1/4, Lot 6, SE1/4NW1/4, S2 NE1/4, Lots 2 & 1 Sec 6

Drawing Date: 7-19-01

DRAWING NO.		ARIZONA DEPARTMENT OF TRANSPORTATION INTERMODAL TRANSPORTATION DIVISION RIGHT OF WAY PLANS SECTION
HARD COPY		HIGHWAY
COUNTY		
DRAWN	B. GURNEY	PROJECT NO.
CHECKED	H. VERDUGO	TRACS NO.
SCALE		
ROUTE	SECTION	SHEET OF