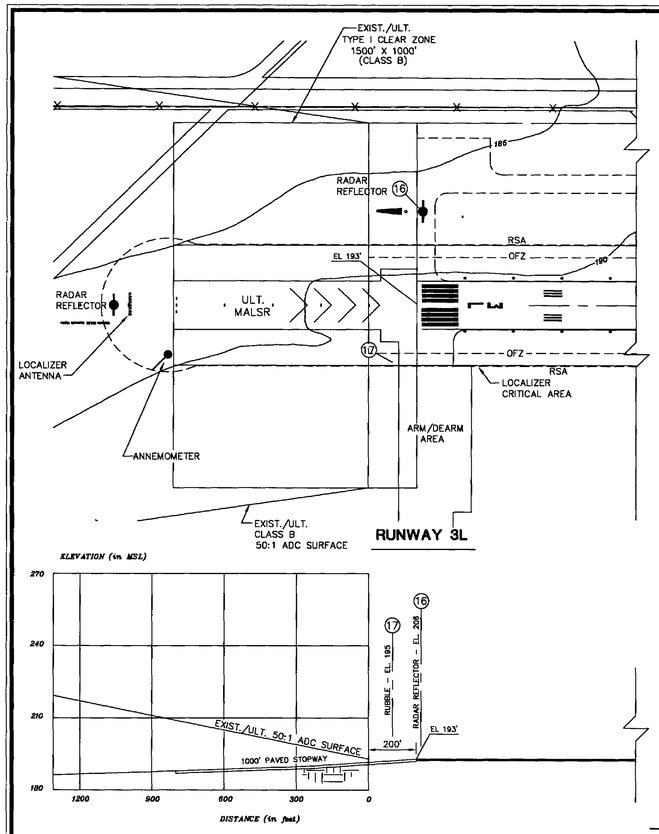

RUNWAY 3L

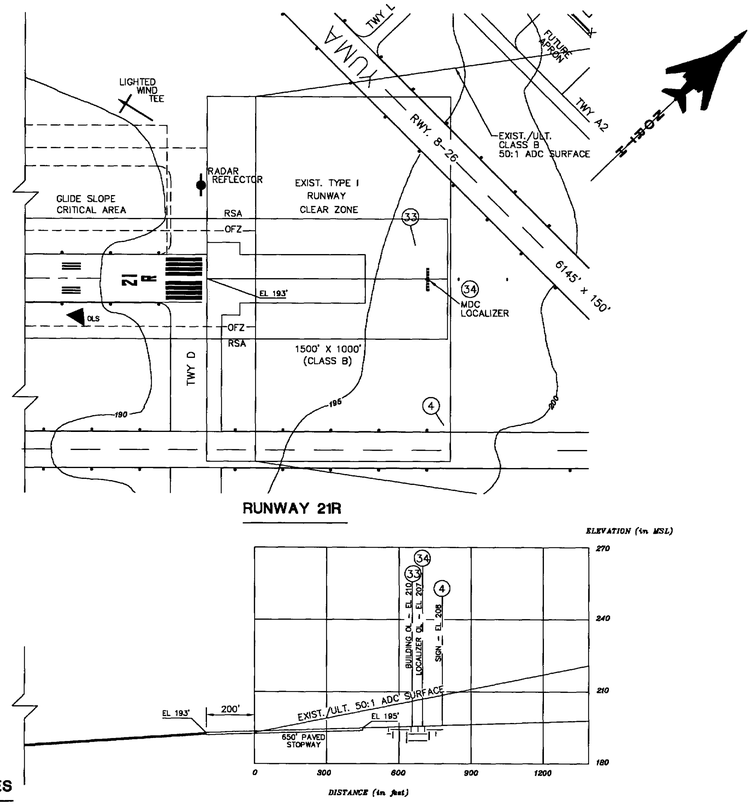

RUNWAY 21R

RUNWAY 3L-21R CLEAR ZONES PLANS & PROFILES

OBSTRUCTION TABLE

Description	Elevation (MSL)	Obstruction	Disposition	Runway
4. SIGN	UP TO 208'	8' OBSTRUCTION TO THE PRIMARY SURFACE	NOTED-NAVAID	3R-21L
6. WINDSOCK *	UP TO 224'	18' OBSTRUCTION TO THE PRIMARY SURFACE	RELOCATE OR LIGHT	3R-21L
15. WINDSOCK *	UP TO 212'	19' OBSTRUCTION TO THE PRIMARY SURFACE	RELOCATE OR LIGHT	3L-21R
16. RADAR REFLECTOR	UP TO 206'	13' OBSTRUCTION TO THE PRIMARY SURFACE	NOTED-NAVAID	3L-21R
17. RUBBLE	UP TO 195'	2' OBSTRUCTION TO THE PRIMARY SURFACE	REMOVE	3L-21R
30. TACAN OL GEAR	UP TO 216'	18' OBSTRUCTION TO THE APPROACH SURFACE	LIGHTED	3R-21L
31. RADAR OL	UP TO 217'	18' OBSTRUCTION TO THE APPROACH SURFACE	LIGHTED	3R-21L
33. BUILDING OL	UP TO 210'	3' OBSTRUCTION TO THE APPROACH SURFACE	LIGHTED	3L-21R
34. LOCALIZER OL	UP TO 207'	1' OBSTRUCTION TO THE APPROACH SURFACE	LIGHTED	3L-21R
39. 32nd St.	UP TO 225'	12' OBSTRUCTION TO THE APPROACH SURFACE	REQUEST AERONAUTICAL STUDY	3R-21L

* OBSTRUCTIONS TO THE PRIMARY SURFACE ONLY

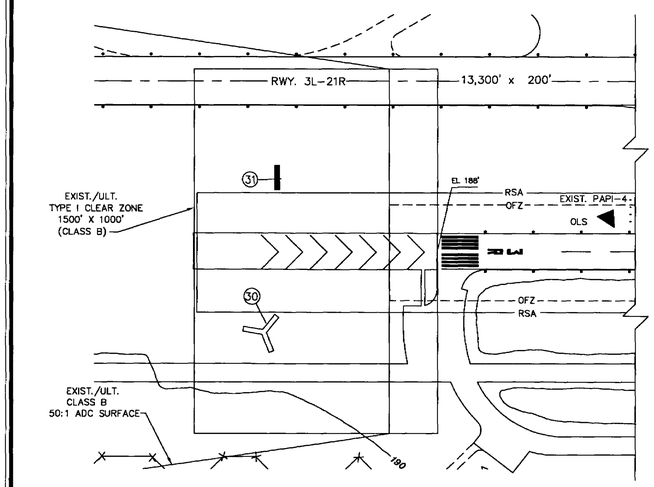

RUNWAY 3R

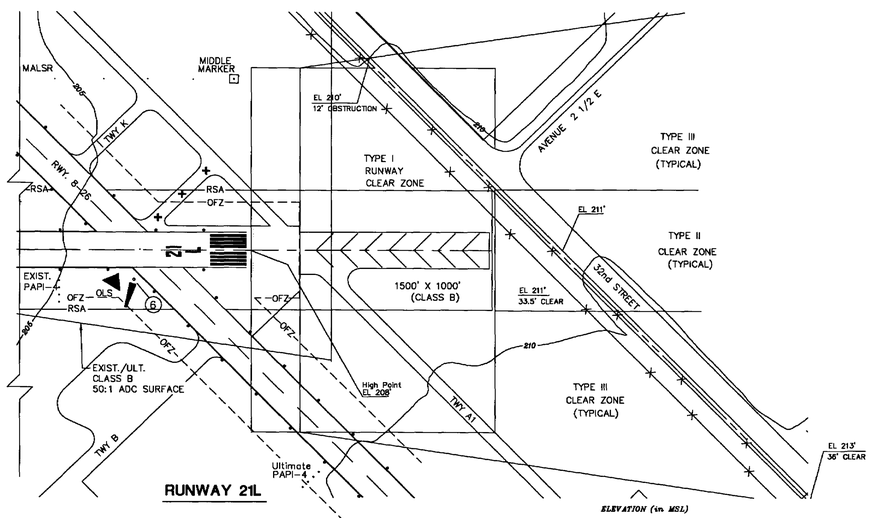

RUNWAY 21L

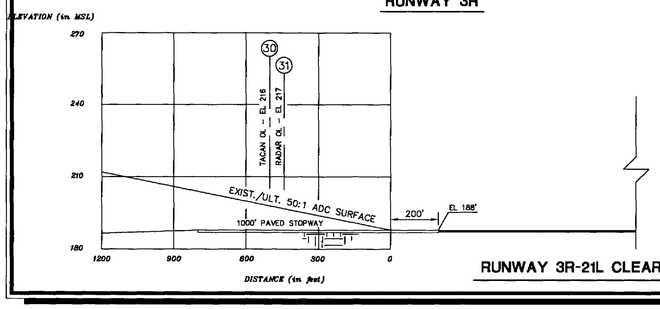

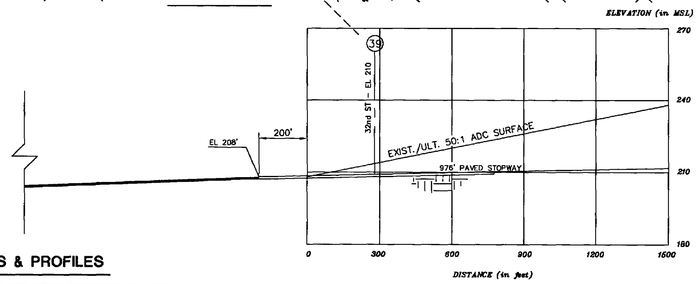

RUNWAY 3R-21L CLEAR ZONES PLANS & PROFILES

GENERAL NOTES:

1. Obstructions, clearances, and locations are based on OC 511, Feb. 1989, and calculated from ultimate runway end elevations and ultimate approach surfaces, unless otherwise noted.
2. Depiction of features and objects within the primary, transitional, and horizontal Part 77 surfaces, is illustrated on the PART 77 AIRSPACE PLAN, sheet 5 of 9, of these plans.
3. Depiction of features and objects within the outer portion of the approach surfaces, is illustrated on the APPROACH ZONES PROFILES, sheet 7 of 9, of these plans.

HORIZONTAL SCALE 0 300 600 900 SCALE IN FEET

VERTICAL SCALE 0 30 60 90 SCALE IN FEET

No.	REVISIONS	DATE	BY	APP'D
2	PREVIOUS ALP APPROVED BY THE YCAA.	9/14/92	--	EMT
1	PREVIOUS ALP APPROVED BY THE FAA.	8/16/92	--	JPM

"THE CONTENTS OF THIS PLAN DO NOT NECESSARILY REFLECT THE OFFICIAL VIEWS OR POLICY OF THE FAA. ACCEPTANCE OF THIS DOCUMENT BY THE FAA DOES NOT IN ANY WAY CONSTITUTE A COMMITMENT ON THE PART OF THE UNITED STATES TO PARTICIPATE IN ANY DEVELOPMENT DEPICTED HEREIN NOR DOES IT INDICATE THAT THE PROPOSED DEVELOPMENT IS ENVIRONMENTALLY ACCEPTABLE IN ACCORDANCE WITH APPROPRIATE PUBLIC LAWS."

YUMA INTERNATIONAL AIRPORT
YUMA COUNTY AIRPORT AUTHORITY

CLEAR ZONES PLAN
RUNWAYS 3L-21R and 3R-21L

YUMA, ARIZIONA

PLANNED BY: Chris Hagunin
DETAILED BY: W.B. Holland
APPROVED BY: James M. Harris, P.E.

February 2, 1999 SHEET 10 OF 10

Coffman Associates
Airport Consultants